GB	UNITED KINGDOM

Diagram / Parts List

DCL284F

CORDLESS CLEANER

2024/08

(GB) DCL284F / CORDLESS CLEANER

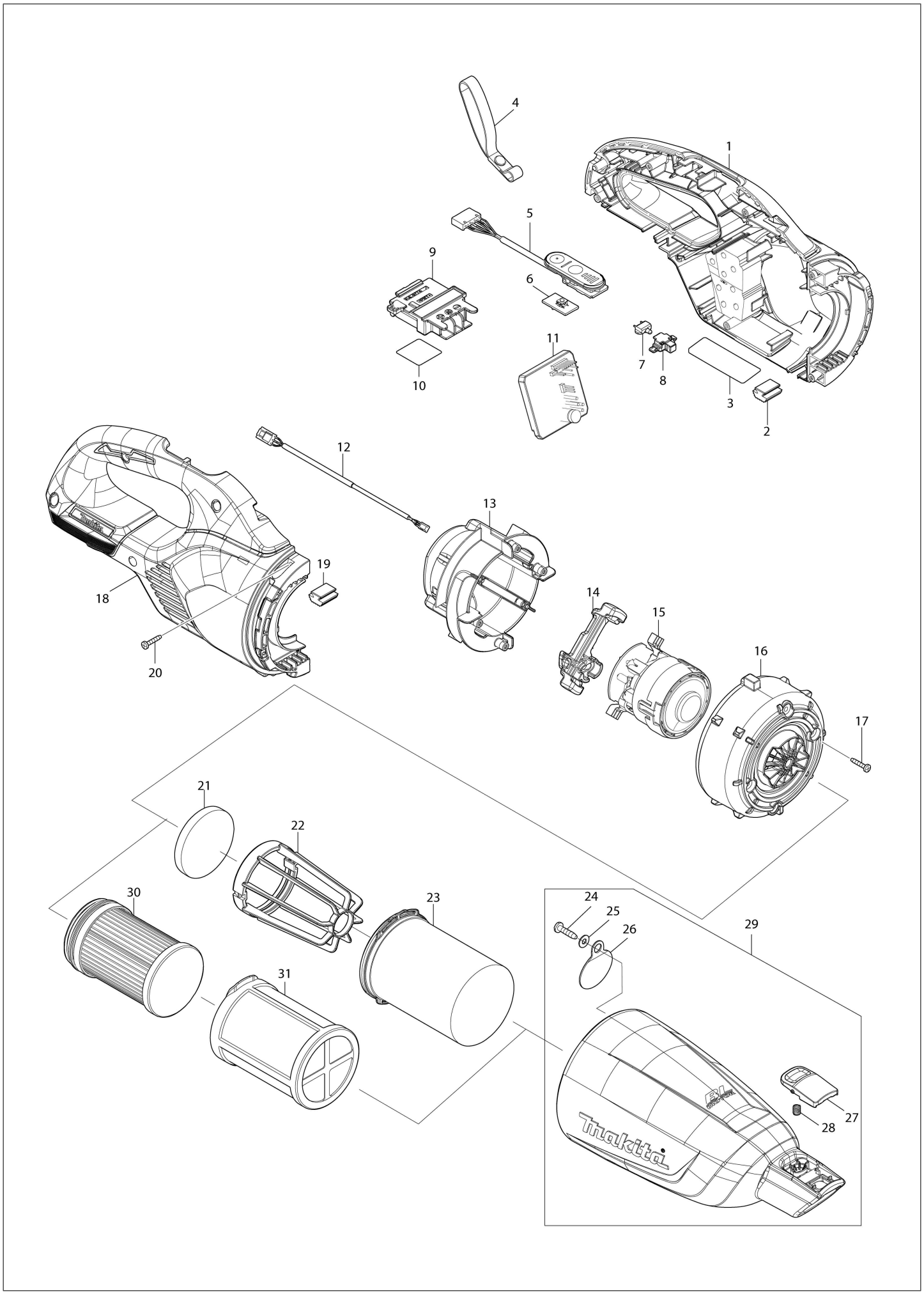

GB	UNITED KINGDOM

DCL284F / CORDLESS CLEANER

Item	Parts No.	Parts Description	Qty	Remark
001	183Y67-4	HOUSING SET	1	
002	422460-0	RUBBER PLATE	1	
003	8588G2-5	DCL284F NAME PLATE	1	
004	163400-6	HANDSTRAP	1	
005	141B54-1	INDICATION CIRCUIT COMPLETE	1	
006	620E74-1	SWITCH UNIT	1	
007	620E82-2	LED CIRCUIT	1	
008	141H09-2	LED CASE COMPLETE	1	
009	643874-2	TERMINAL	1	
010	8588H4-8	DCL284F SERIAL NO. LABEL	1	
011	620L20-6	CONTROLLER	1	
012	632S32-9	LEAD UNIT	1	
013	141E55-7	MOTOR COVER R COMPLETE	1	
014	422723-4	MOTOR COVER SEAL	1	
015	629B87-1	MOTOR ASSEMBLY	1	
016	413645-9	MOTOR COVER F	1	
017	266429-2	TAPPING SCREW 3X16	4	
018	183Y67-4	HOUSING SET	1	
019	422460-0	RUBBER PLATE	1	
020	266429-2	TAPPING SCREW 3X16	7	
021	422268-2	SPONGE SHEET 57	1	
022	458467-0	STAY	1	
023	459325-3	EASY SHAKE OFF FILTER B	1	
024	266326-2	TAPPING SCREW 4X18	1	
025	941051-3	FLAT WASHER 4	1	
026	424208-6	VALVE	1	
027	413F33-6	BUTTON C	1	
028	232485-4	COMPRESSION SPRING 5	1	
029	136965-1	CAPSULE ASSEMBLY	1	